$$R_2 = R_0 - L_1 R_1 R_2 + L_2 R_1 R_2 PAN$$

$$R_2 = \frac{R_0}{1 + L_1 R_1 + L_2 R_1 PAN}$$

$$R_3 = R_2 - L_4 R_3$$

$$R_3 = \frac{R_2}{1 + L_4}$$

$$R_1 = S - k_0 R_1 R_2 - k_1 R_1 R_2 FAN$$

$$R_1 = \frac{S}{1 + k_0 R_2 + k_1 R_2 FAN}$$

$$\dot{B} = k_2 R_1 R_2 - k_3 B - \eta_4 B$$

$$\dot{P} = k_6 B + \frac{k_5 M}{P_5} - k_7 R_1 R_2 PAN - k_8 P$$

$$\dot{G} = k_4 R_3 - L_3 G - L_4 C G FAN$$

$$C = L_5 R_1 R_2 PAN - L_6 C G FAN$$

$$C = \frac{L_5 R_1 R_2 PAN}{1 + L_6 G FAN}$$

$$\dot{A} = \frac{L_7 M}{P_4} + L_8 CG FAN - L_9 R_1 R_2 PAN - \eta_1 A - \eta_2 AF - \eta_3 N$$

$$\dot{N} = N_4 N + N_5 (\text{[illegible]})(N_0) \qquad \dot{F} = W - N_6 AF - N_7 CG FAN - N_8 F$$

$$\dot{M} = P_1 C + P_2 \eta_1 A + P_3 N_6 AF - L_7 M - k_6 M$$

Rain

Sun, wind

geologic work

Fertilizer

Goods + Services

Pop. with No

Market #

Fuel + minerals

Ground water + snow

Agr

Ass'ts

Pop.

Market Mfc goods

Market

Australia

H. T. Odum + D. Scienceman

Uni of Florida, USA.
March 1994

EQUATIONS FOR THE SIMULATION OF THE ENERGY DIAGRAM OF AUSTRALIA

PREPARED BY PROFESSOR H.T. ODUM. 1993

TYPED BY DR. DAVID M. SCIENCEMAN, 09 DECEMBER 2006.

$$\dot{B} = k_2 R_1 R_2 - k_3 B - k_4 B$$

$$\dot{P} = k_5 B + \frac{k_6 M}{P_5} - k_7 R_1 R_2 PAN - k_8 P$$

$$\dot{G} = k_9 R_3 - L_8 G - L_4 CGFAN$$

$$\dot{A} = \frac{L_7 M}{P_4} + L_8 CGFAN - L_9 R_1 R_2 PAN - n_1 A - n_2 AF - n_3 N$$

$$\dot{N} = N_4 N + N_5 N_o \left(\frac{A}{N}\right)$$

$$\dot{F} = W - N_6 AF - N_7 CGFAN - N_8 F$$

$$\dot{M} = p_1 C + p_2 n_1 A + p_3 N_6 AF - L_7 M - k_6 M$$

$$C = L_5 R_1 R_2 PAN - L_6 CGFAN$$

$$C = \frac{L_5 R_1 R_2 PAN}{1 + L_6 GFAN}$$

$$\begin{cases} R_2 = R_o - L_1 R_1 R_2 + L_2 R_1 R_2 PAN \\ R_2 = \dfrac{R_o}{1 + L_1 R_1 + L_2 R_1 PAN} \end{cases}$$

$$\begin{cases} R_1 = S - k_o R_1 R_2 - k_1 R_1 R_2 PAN \\ R_1 = \dfrac{S}{1 + k_o R_2 + k_1 R_2 PAN} \end{cases}$$

$$\begin{cases} R_3 = R_2 - k_9 R_3 \\ R_3 = \dfrac{R_2}{1 + k_9} \end{cases}$$

$$R_2 = R_0 - L_1 R_1 R_2 + L_2 R_1 R_2 PAN$$

$$R_2 = \frac{R_0}{1 + L_1 R_1 + L_2 R_1 PAN}$$

$$R_3 = R_2 - k_4 R_3$$

$$R_3 = \frac{R_2}{1 + k_4}$$

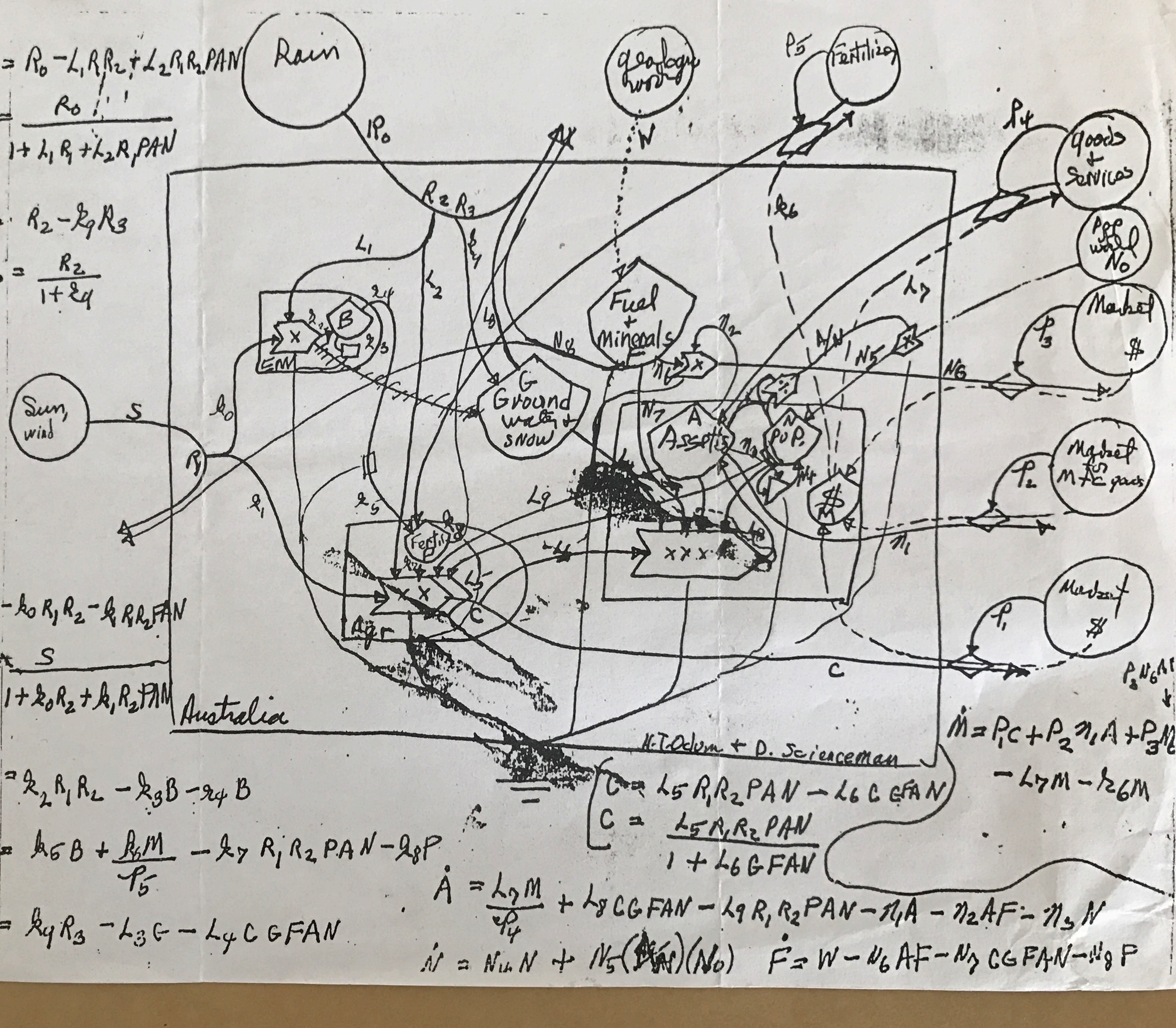

$$R_2 = R_0 - L_1 R_1 R_2 + L_2 R_1 R_2 PAN$$

$$R_2 = \frac{R_0}{1 + L_1 R_1 + L_2 R_1 PAN}$$

$$R_3 = R_2 - k_4 R_3$$

$$R_3 = \frac{R_2}{1 + k_4}$$

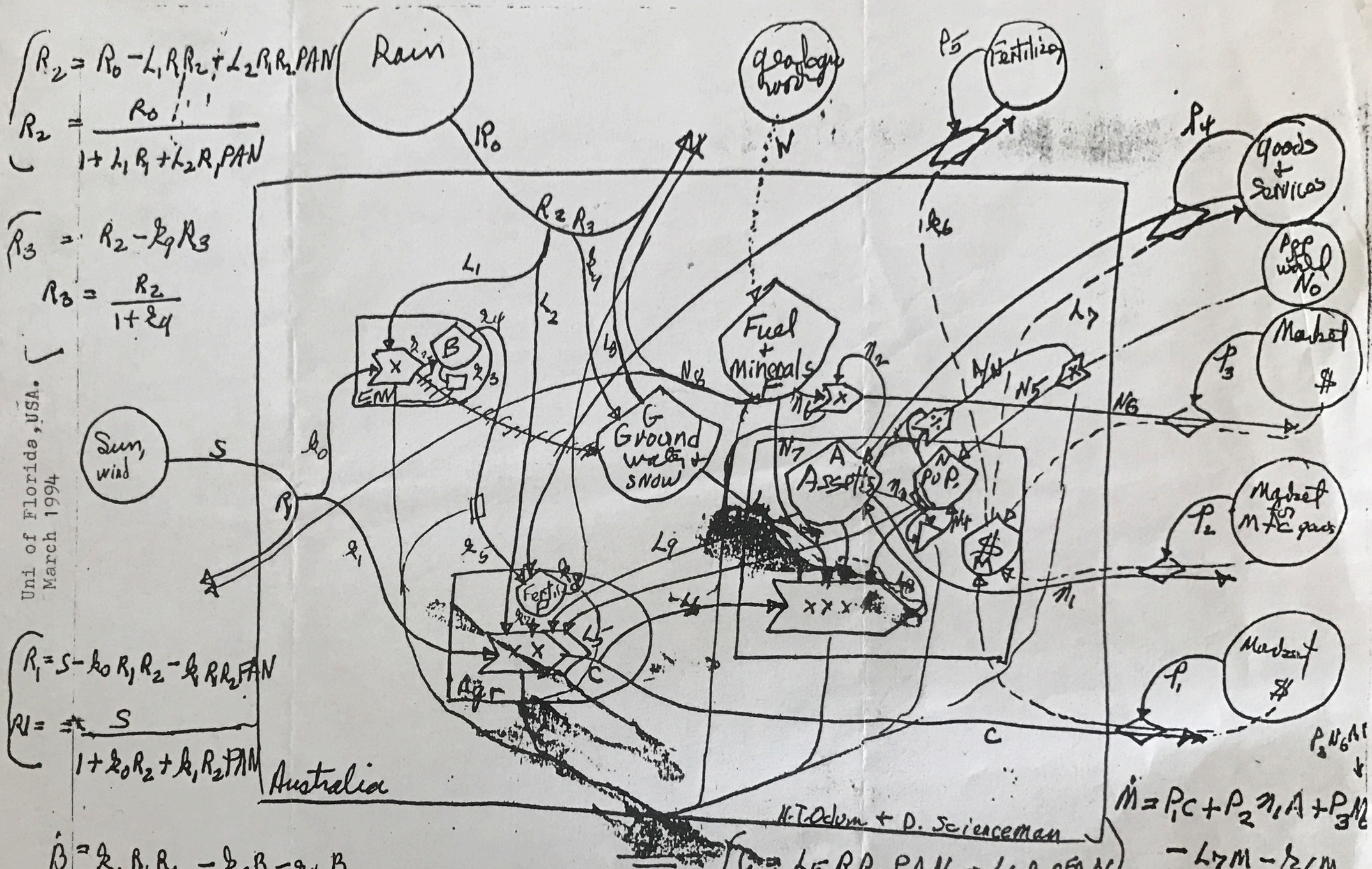

$$R_1 = S - k_0 R_1 R_2 - k_1 R_1 R_2 FAN$$

$$R_1 = \frac{S}{1 + k_0 R_2 + k_1 R_2 FAN}$$

$$\dot{B} = k_2 R_1 R_2 - k_3 B - r_4 B$$

$$\dot{P} = k_6 B + \frac{k_6 M}{P_5} - k_7 R_1 R_2 PAN - k_8 P$$

$$\dot{G} = k_4 R_3 - L_3 G - L_4 C G FAN$$

$$C = L_5 R_1 R_2 PAN - L_6 C G FAN$$

$$C = \frac{L_5 R_1 R_2 PAN}{1 + L_6 G FAN}$$

$$\dot{A} = \frac{L_7 M}{P_4} + L_8 CGFAN - L_9 R_1 R_2 PAN - r_1 A - r_2 AF - r_3 N$$

$$\dot{N} = N_4 N + N_5 (\quad)(N_0) \qquad \dot{F} = W - N_6 AF - N_7 CGFAN - N_8 F$$

$$\dot{M} = P_1 C + P_2 r_1 A + P_3 M_2 - L_7 M - k_6 M$$

$P_2 N_6 AF$

Uni of Florida, USA.
March 1994

$1\ g/cm^3$; g = the acceleration of gravity = 980 cm/s^2; and h = the average

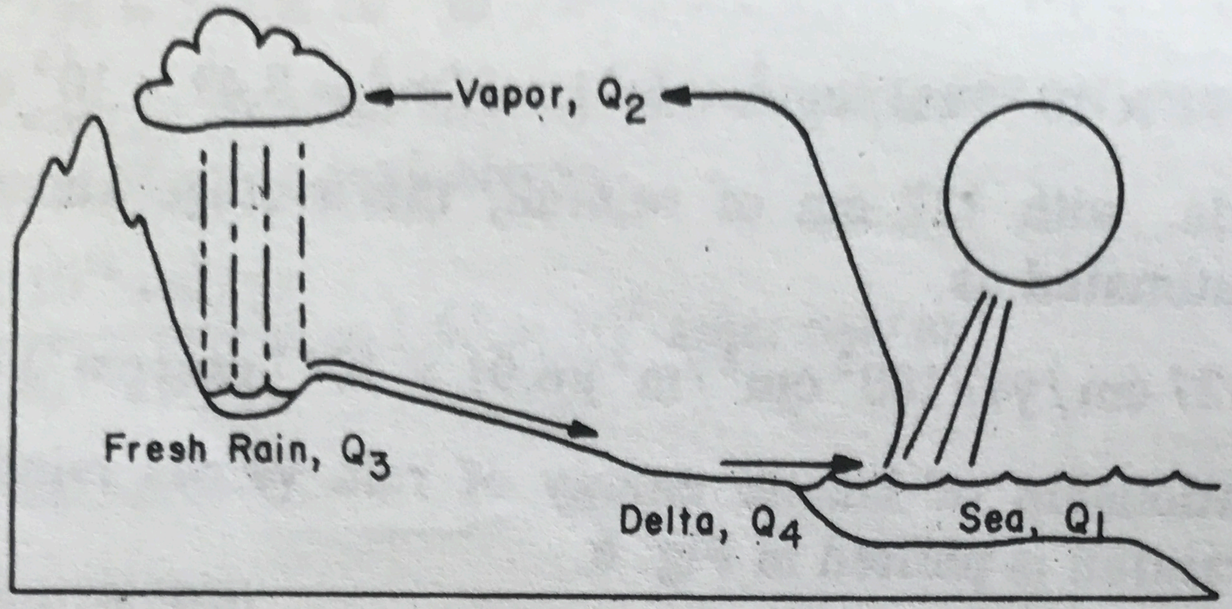

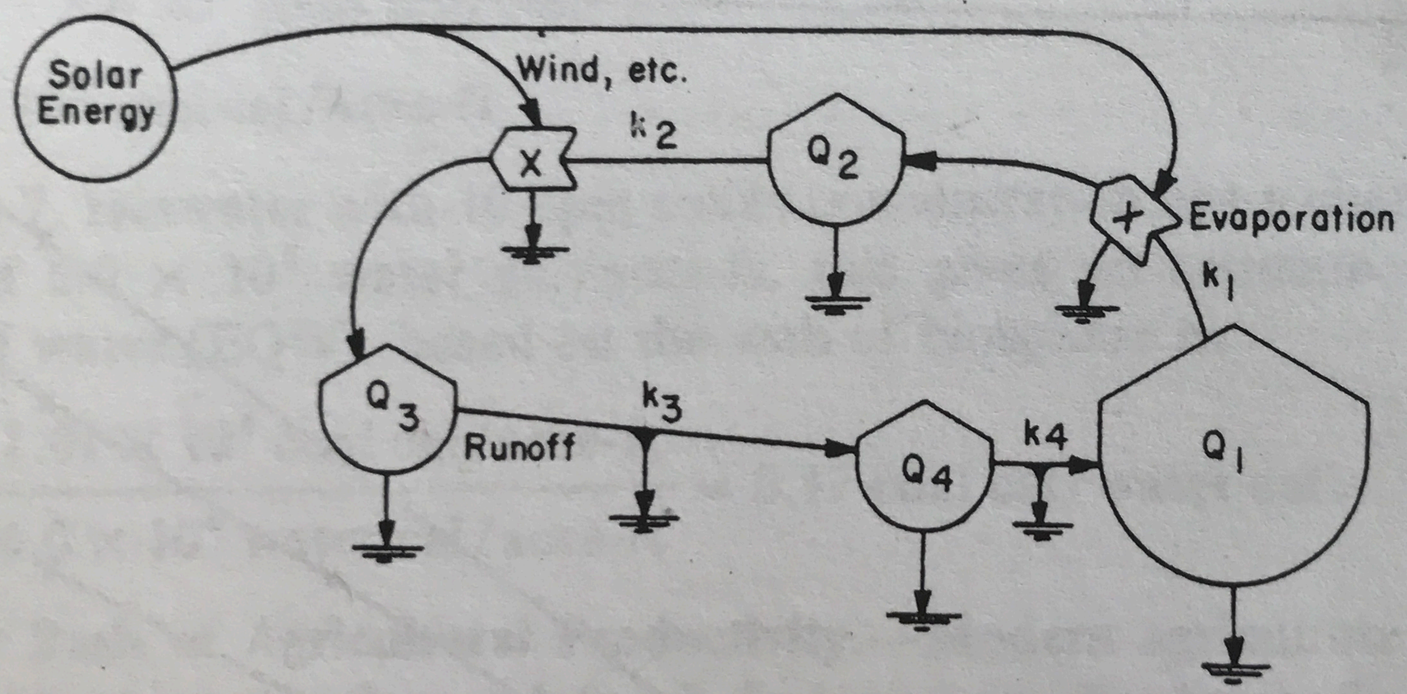

FIG. 4.—Hydrologic Cycle from Energy Flow Perspective

height of land (say in Florida, 10 m above mean sea level). Substituting these

1 g/cm^3; g = the acceleration of gravity = 980 cm/s^2; and h = the average

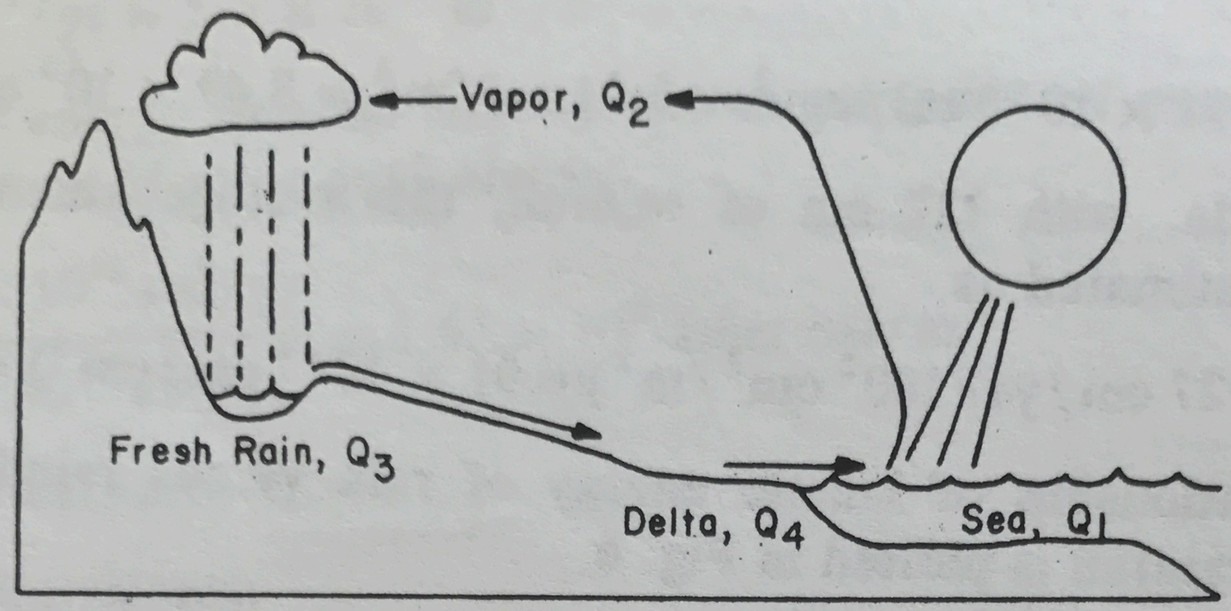

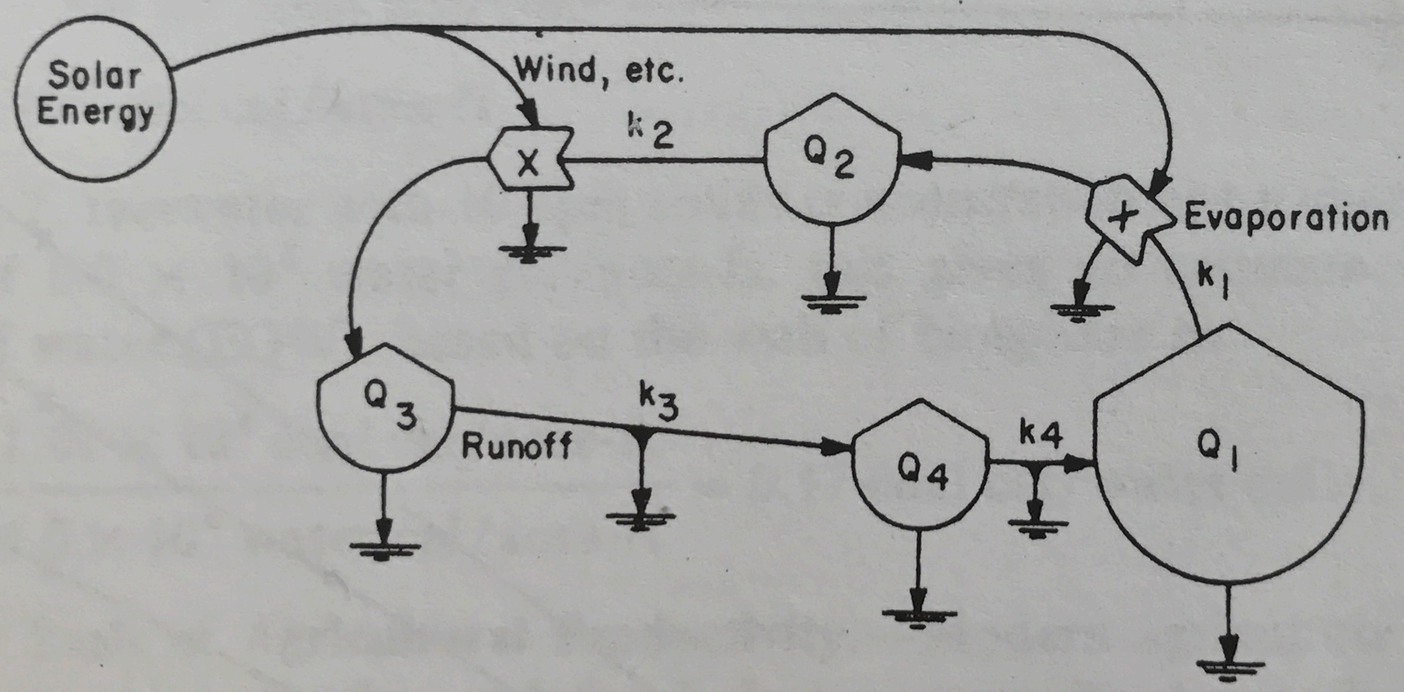

FIG. 4.—Hydrologic Cycle from Energy Flow Perspective

height of land (say in Florida, 10 m above mean sea level). Substituting these

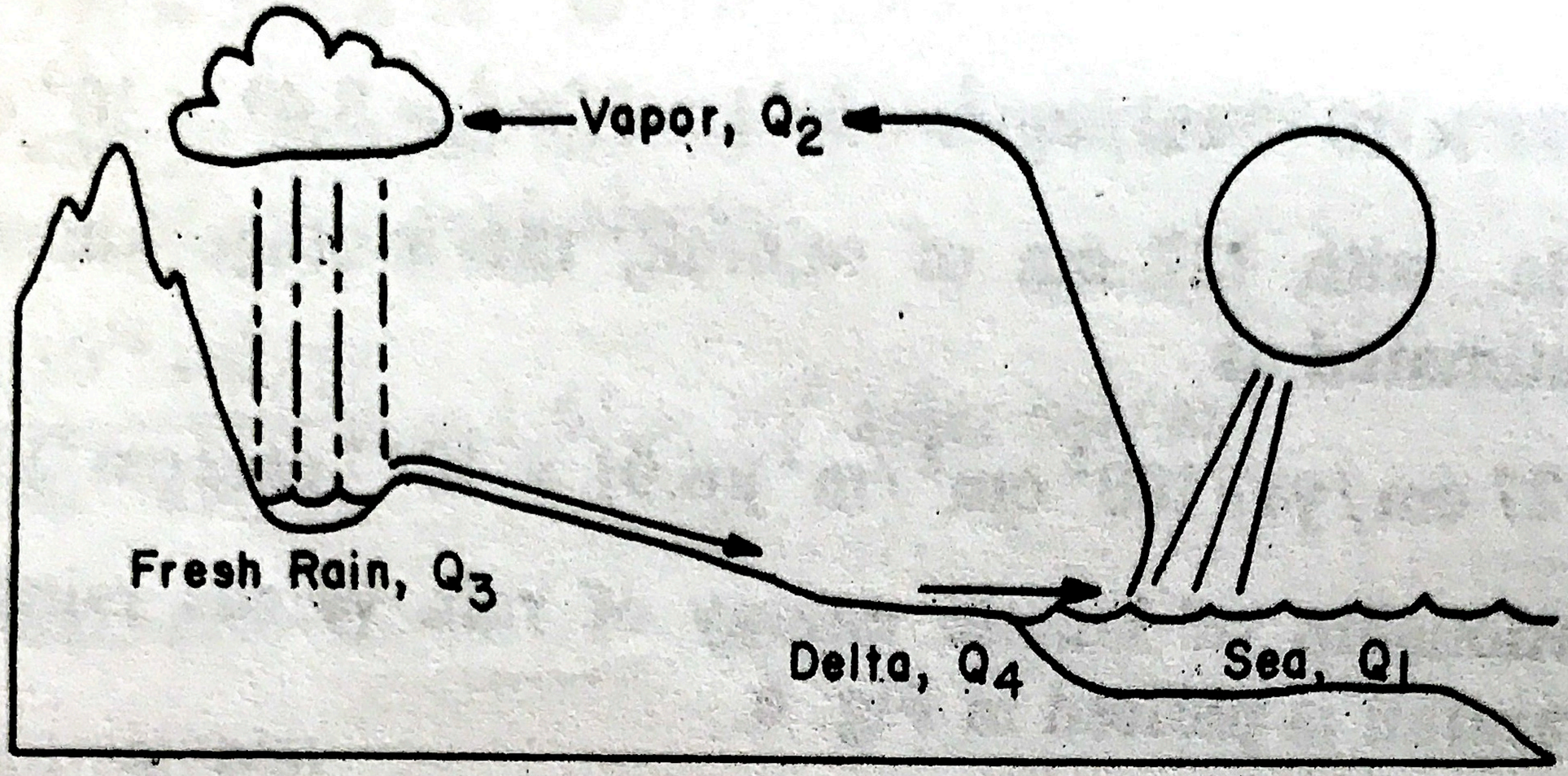

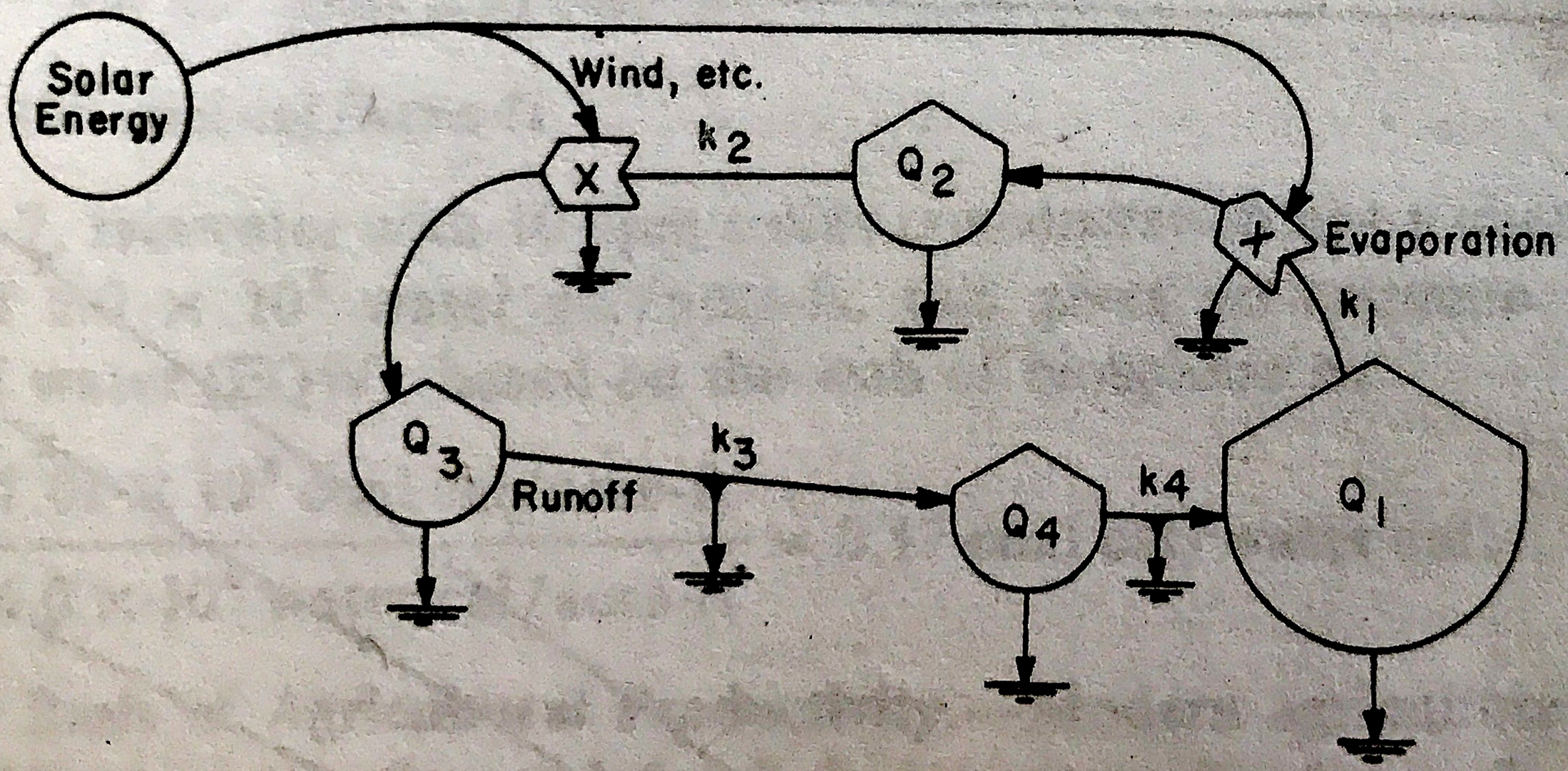

FIG. 4.—Hydrologic Cycle from Energy Flow Perspective

$1\ g/cm^3$; g = the acceleration of gravity = 980 cm/s^2; and h = the average

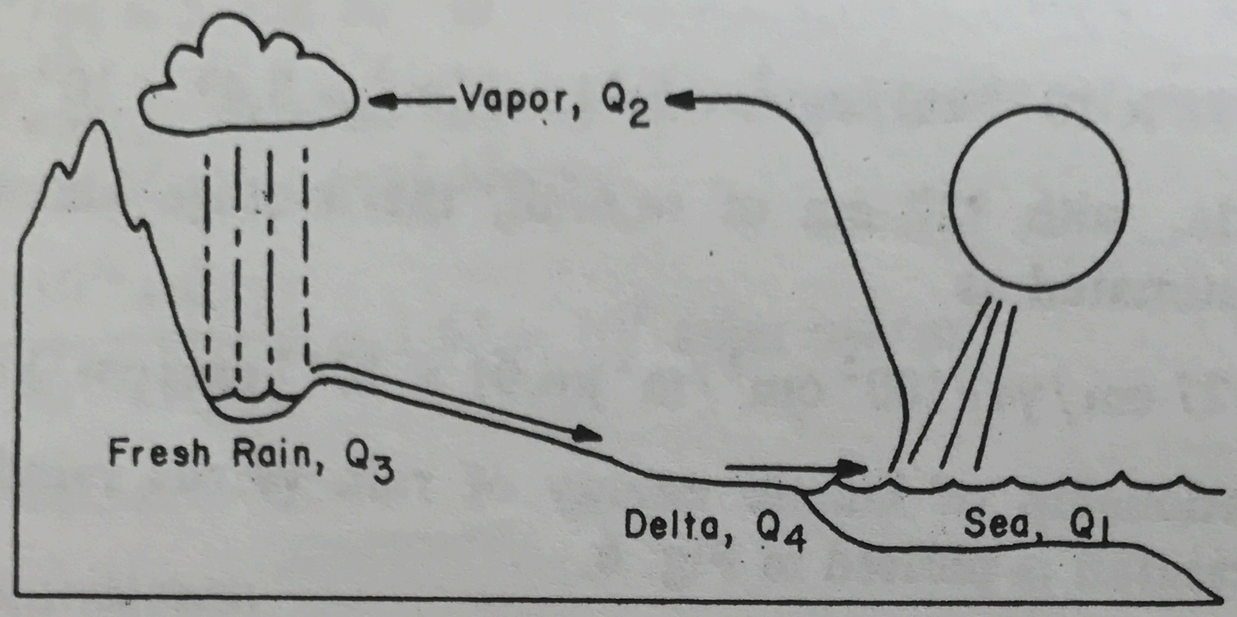

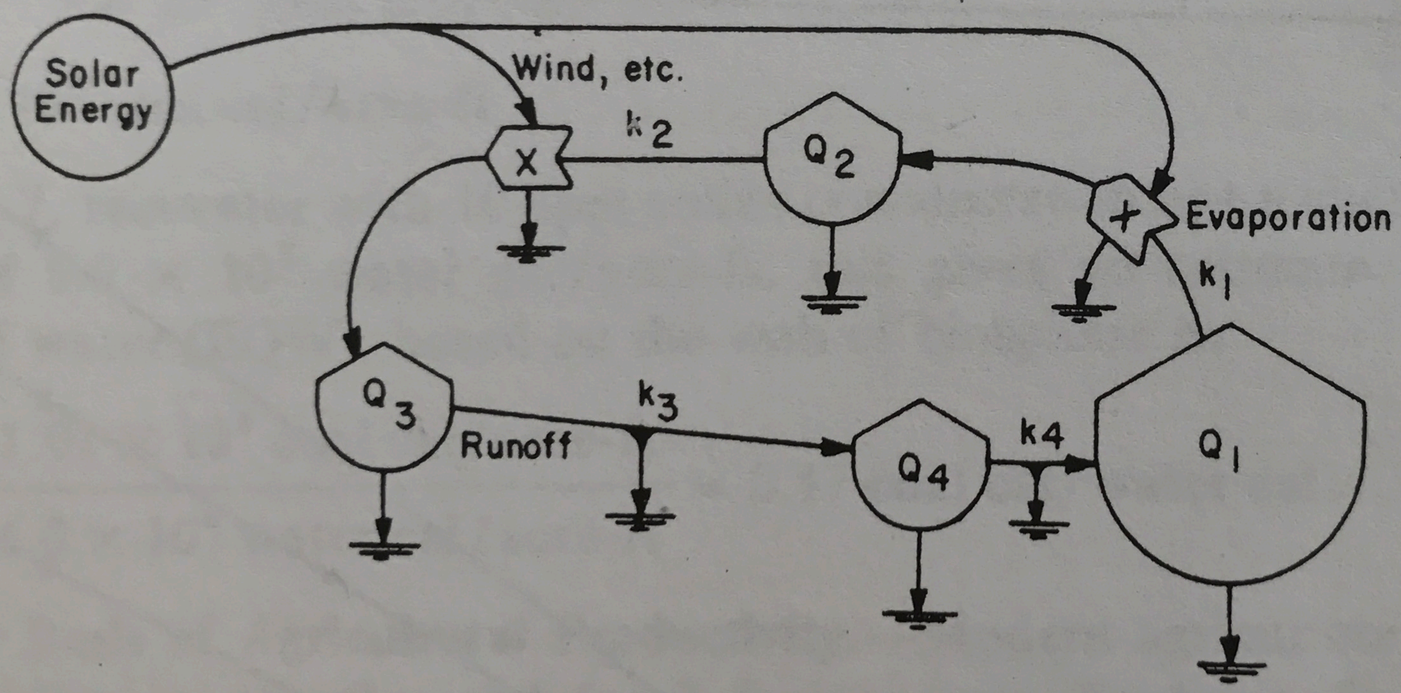

FIG. 4.—Hydrologic Cycle from Energy Flow Perspective

height of land (say in Florida, 10 m above mean sea level). Substituting these

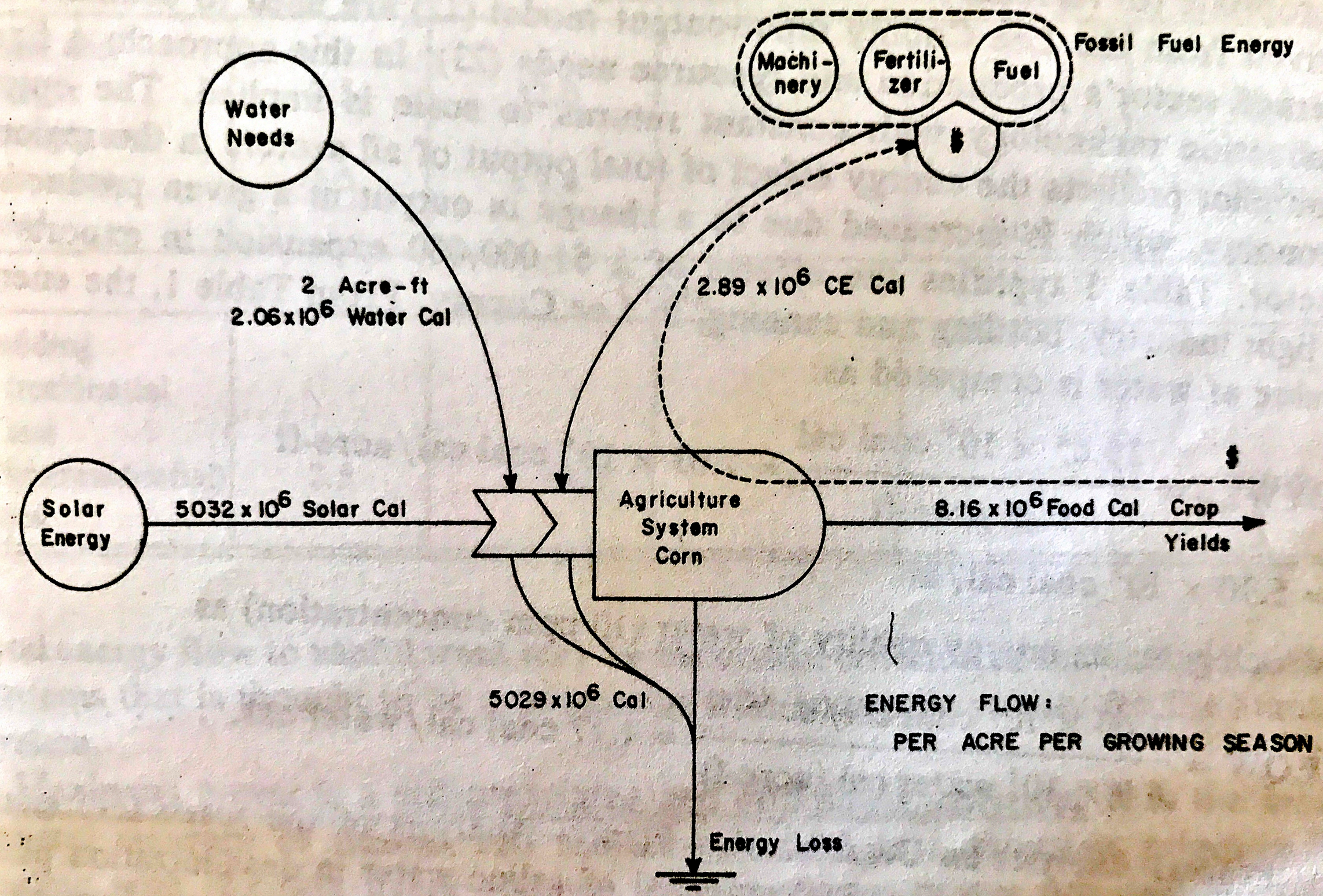

FIG. 8.—Simplified Agricultural Crop Unit Model

is considered a free energy and thus commonly ignored. The first and second

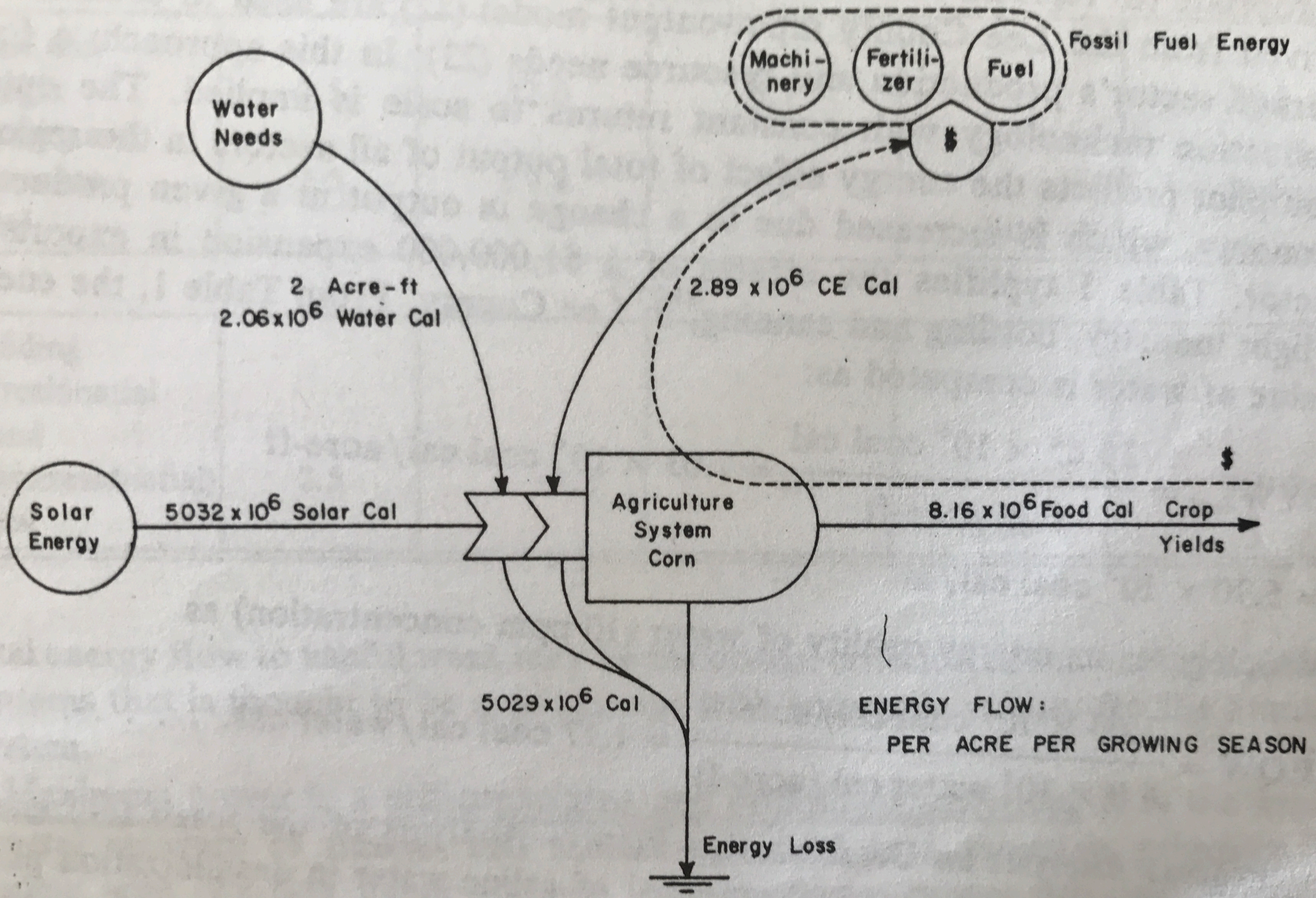

FIG. 8.—Simplified Agricultural Crop Unit Model